3034R

VOLTAGE POLARIES SHOWN ARE FOR MOTORING DA1(+)

HARDWARE ABBREVIATIONS

MCC	MAIN CONTROL CARD
IFC	INTERFACE CARD
PSC	POWER SUPPLY CARD
SCR	THYRISTOR ASSEMBLY
DGC	DIAGNOSTIC CARD
MFC	MOTOR FIELD CONTROL
MDR	MODIFICATION RACK

SYMBOLS

AMPLIFIERS

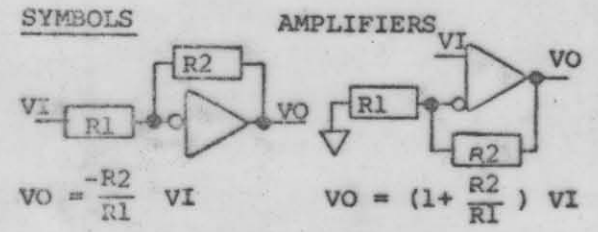

$VO = \frac{-R2}{R1} VI$ $VO = (1 + \frac{R2}{R1}) VI$

CASE GROUND

VO = SIGN () X ABSOLUTE VALUE OF VI

STAB ON TERMINAL

TERMINAL AT 2TB, 3TB, 4TB, RTB.
EX: 9 [2] - 2TB9; X2 [R] - RTBX2

TERMINAL AT T.B.'s

POTENTIOMETER ARROWS ON THE CARD ELEMENTARY DIAGRAMS INDICATE THE WIPER DIRECTION AS THE POTENTIOMETER SHAFT IS ROTATED CLOCKWISE TO INCREASE FUNCTION.

FUNCTION	USE	LOC	JUMPERS
60HZ		MCC MFC	AA-AS, BA-BS, CA-CS ZA-ZB (IF USED)
50HZ	X	IFC IFC IFC MCC	0.0047uF RT1-RT2 0.0047uF RT2-RT3 0.0047uF RT3-RT1 AA-AF, BA-BF, CA-CF
IOC-400% -500% -300%		 IFC IFC	NONE I-IHI I-ILO
SR5 - 9v 9 - 20v		 MCC	(NONE) SRH-COM
JOGR 10v 20V		 MCC	(NONE) JH - COM
LT.3-7sec. 2 - 60sec	 X	 MCC	(NONE) 332ΩFROM LT1TOCOM
VREG		IFC	NT-CEMF, CC-COM
DC TACHO AC TACHO	X 	 MCC	(NONE) AT1-AT2
TACHO FILT		IFC	TC-TC
TACHO V. 24-64vdc 27-71vac 60-160vdc 66-177vac 110-300vdc 120-300vac	 X 	 IFC IFC IFC IFC IFC IFC	 NT-NT1, PT-PT1 NT-NT1, PT-PT1 NT-NT2, PT-PT2 NT-NT2, PT-PT2 NT-NT3, PT-PT3 NT-NT3, PT-PT3
G134 G256 W .8 1.7 Σ 1.3 2.8 < 2.4 5.0 Σ 4.0 8.0 < 7.0 13 Σ 13 25	 X	 MFC MFC MFC MFC MFC MFC	 NONE YB-YD YA-YB YA-YB, YC-YD YA-YC YA-YC, YB-YD
L/R < .25S	X	MFC	QA-QB
INH RUN		DGC	D1-D2 (IF USED)

SEE NOTE PAGE 9

SIGNAL DEFINITIONS AND LOCATIONS

*	CEMF	COUNTER EMF (3 16)
*	CFB	CURRENT FEEDBACK (3 16)
	CMFA	ABSOLUTE VALUE CEMF (3 08)
	CRM	CROSSOVER MODIFY (3 11)
	DFP	DELAYED FIRING POWER (3 25)
*	DR	DRIVER REFERENCE (3 33)
*	EAO	ERROR AMP OUTPUT (3 33)
	EST	EXTERNAL FLT STOP INPUT (3 14)
	FALT	FAULT (3 14)
*	FC	FIELD CURRENT (NS26)
	FDR	FIELD DIAGNOSTIC REFERENCE (3 08)
	FEA	FIELD ECONOMY ADJUST (3 25)
	FF	FIELD FAULT (3 28)
	IABS	MOTOR CURRENT ABSOLUTE (3 09)
	ILA	CURRENT LIMIT ADJUST (3 23)
	IMET	CURRENT SIGNAL FOR METER (3 10)
*	IPU	INITIAL PULSE (3 20)
*	LR	LOCAL REF. FROM DGC (3 33)
*	JOG	JOG SWITCH INPUT (3 23)
*	JOGR	JOG REFERENCE INPUT (3 31)
*	MAC	MAX/MA CONTROL SIGNAL (3 20)
	MSW	MODE SWITCH (3 30)
*	OSC	OSCILLATOR (3 17)
*	PCR	PHASE CONTROL REF. (3 26)
*	PRE	DRIVE PRECONDITION (3 21)
	ØSEQ	PHASE SEQUENCE (3 14)
	RERR	REGULATOR ERROR (3 27)
	RIJ	INTEGRATOR SUMMING JUNCTION (3 27)
	RJ	REGULATOR SUMMING JUNCTION (3 31)
	RRA	REGULATOR RESPONSE ADJUST (3 30)
	RSET	RESET (3 16)
*	RTR	READY TO RUN (3 16)
*	RUN	RUN SWITCH INPUT (3 21)
*	SA-C	PHASE SYN OUTPUT (3 16)
*	SFB	SPEED FEEDBACK (3 20)
	SMET	SPEED SIGNAL FOR METER (3 12)
*	SR	SYSTEM REFERENCE INPUT (3 29)
*	SYS	SYSTEM FAULT TRIP (3 13)
*	TA	OUTPUT FOR TACHO TRIP ADJUST (2 20)
	TF	TACHO FAULT (NS28)
*	TFB	TACHOMETER FEEDBACK (3 20)
	TFR	AC TACHO FREQUENCY OUTPUT (3 13)
*	TR	TIMED REFERENCE (3 33)
*	VFB	VOLTAGE FEEDBACK (3 19)
*	WFR	WEAK FIELD REFERENCE (3 20)

(* - TEST POINT ON DOOR FRONT)

MAPPING SYSTEM

(NS/PS/TS) PS - PAST SHEET
NS - NEXT SHEET
TS - THIS SHEET

HENCE [PS - 12] DENOTES LOCATION ON PAST SHEET LINE 12. OTHER LOCATIONS ARE DENOTED BY SHEET NUMBER AND LINE, E.G. [1A16] SIGNIFIES LOCATION ON SHEET 1A, LINE 16 ETC.

NOTE: FIELD EFFECT TRANSISTOR: THE CLOSED/OPEN (I/O) STATE OF THESE SWITCHED FOR "PRECONDITION" - "RUN" OR JOG" - "DIAGNOSTIC STATIC" - "DIAGNOSTIC RUN" IS SHOWN BY A FOUR DIGIT WORD WITH STATE SEQUENCE.

▲ THESE RESISTORS ARE CRIMPED IN WIRE HARNESS

DR | SH 1 | CONTD. 2 | ELEMENTARY DIAGRAM 902M126RB

TECHN.	ENG.	APPD.	TECHN.	ENG.	APPD.	DATE 3.9.82
			AS SHIPPED 22.11.82			TECHN. ENG. APPD.

ALLENWEST Simplex VARIABLE SPEED DRIVES OPERATION, BRIGHTON, ENGLAND.

BDC 3034R 40/60 HP FOR CONE BLANCHARD M/C Co

GO NUMBER	ELEMENTARY DIAGRAM	CONTD.
233N00	902M126RB	2

IDENT | DR | SH 1

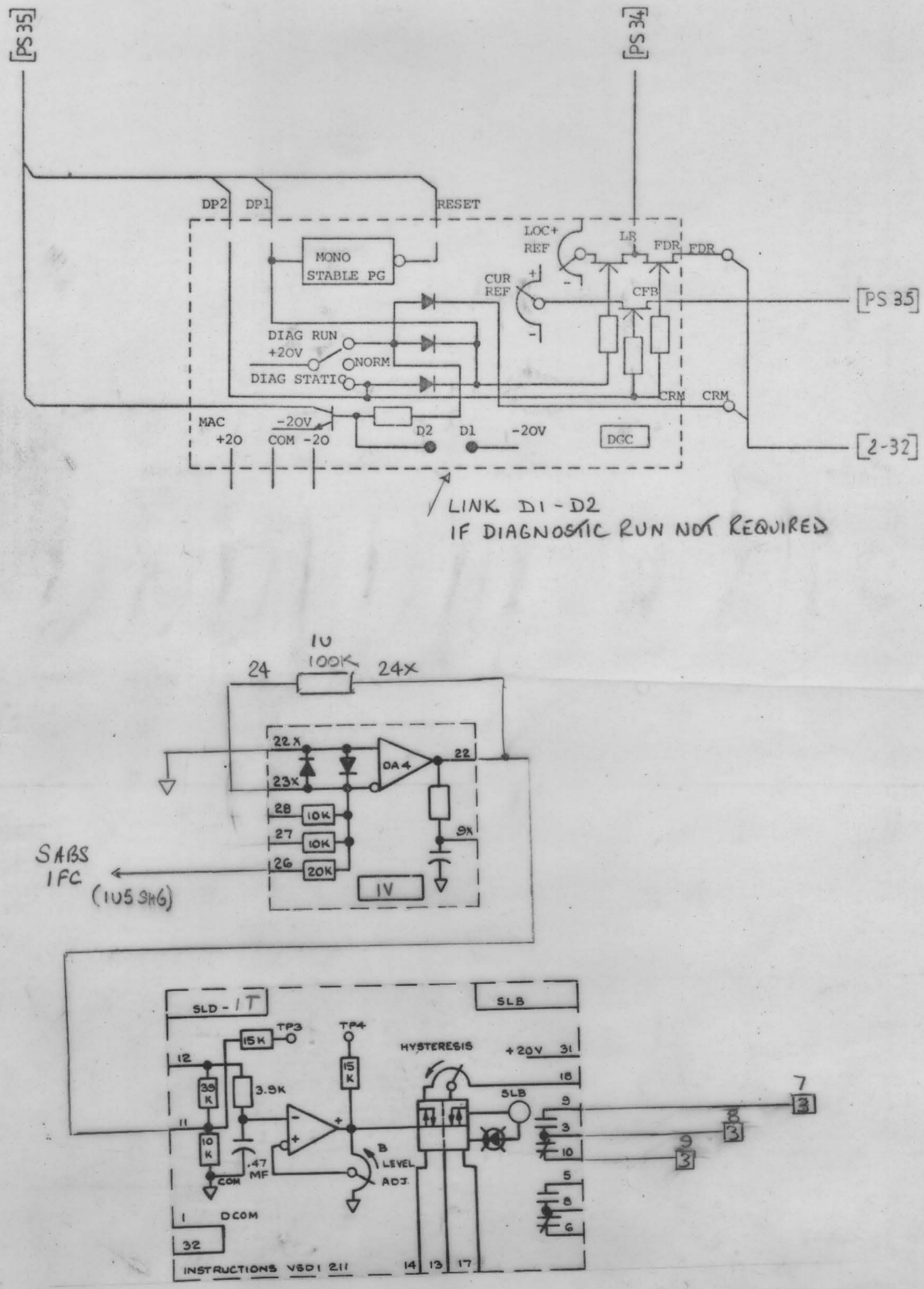

SLOW SPEED DETECTOR

TO OPERATE BETWEEN
20 - 60 RPM
SET AT 40RPM

TECHN.	ENG.	APPD.	TECHN.	ENG.	APPD.	DATE 3.9.82	ALLENWEST Simplex VARIABLE SPEED DRIVES OPERATION, BRIGHTON, ENGLAND.	BDC 3034R 40/60 HP	IDENT DR	SH
						TECHN.				
						ENG. Hab		GO NUMBER 233N00 / ELEMENTARY DIAGRAM 902M126RB / CONTD. 5		4
						APPD.				

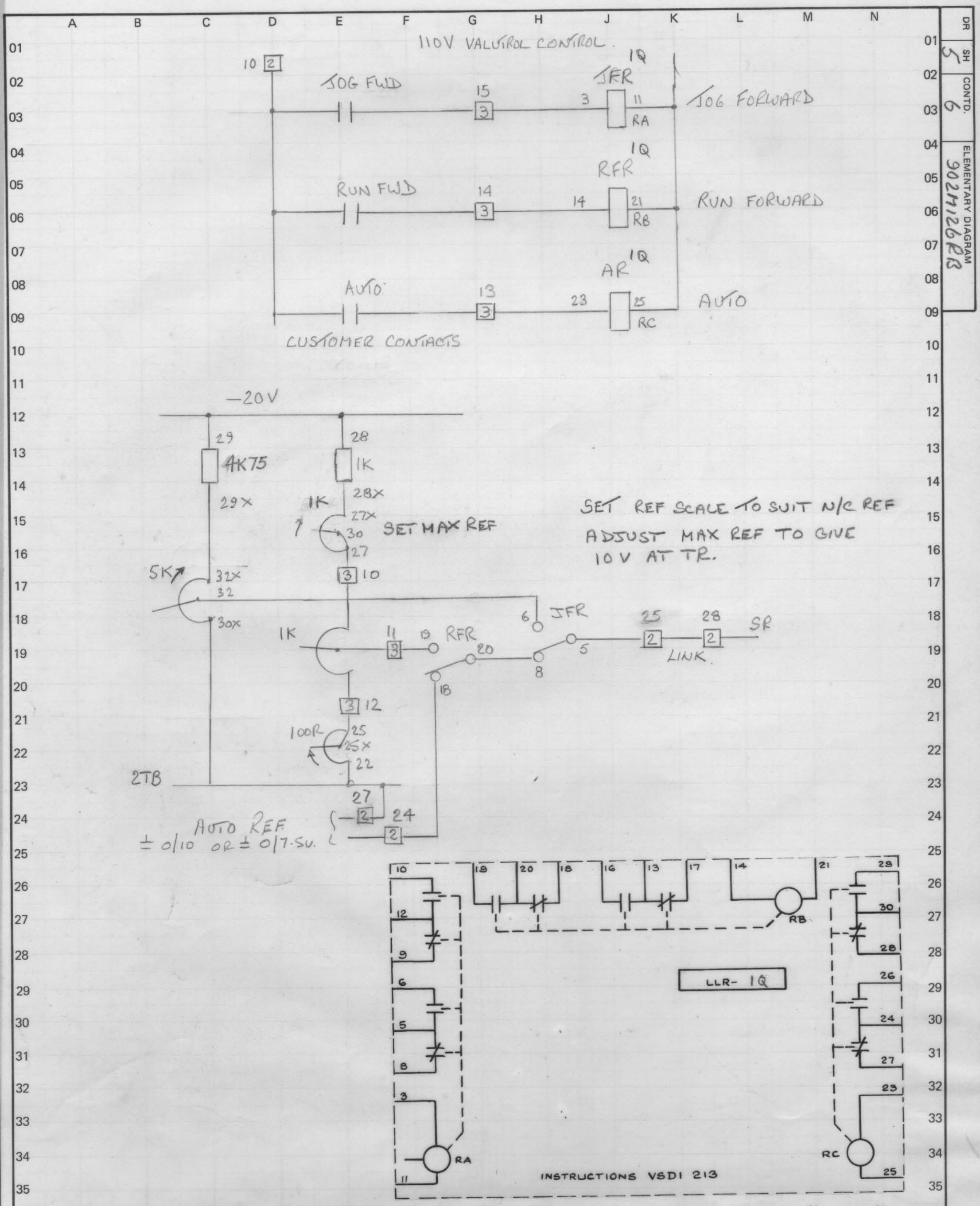

TECHN.	ENG.	APPD.	TECHN.	ENG.	APPD.	DATE 3.9.82	ALLENWEST Simplex	BDC 3034R 40/60 HP REFERENCE CIRCUITS	IDENT
			1K Pot WAS 500R			TECHN.	VARIABLE SPEED DRIVES OPERATION, BRIGHTON, ENGLAND.	GO NUMBER 233N00	ELEMENTARY DIAGRAM 902M126RB
			22.11.82			ENG.		CONTD. 6	DR / SH 5
						APPD.			

DR	SH	CONTD.	ELEMENTARY DIAGRAM
	6	7	902M126RB

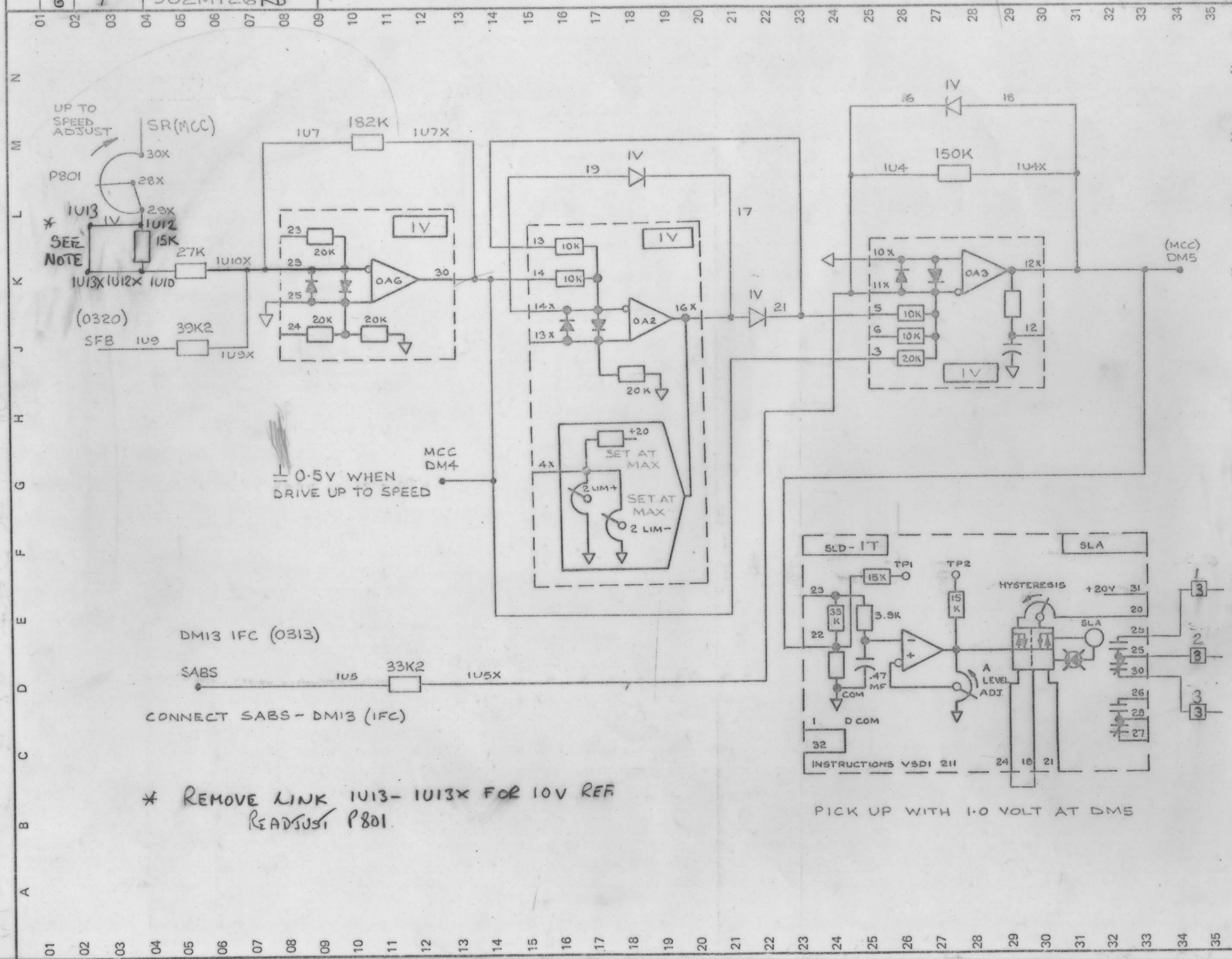

* REMOVE LINK 1U13 - 1U13X FOR 10V REF
READJUST P801

IDENT		DR	SH 6
BDC 3034R 40/60 HP		CONTD.	7
UP TO SPEED CIRCUIT		ELEMENTARY DIAGRAM	902M126RB
		GO NUMBER	233N00
ALLENWEST	Simplex VARIABLE SPEED DRIVES OPERATION, BRIGHTON, ENGLAND.		
DATE 3-9-82	TECHN.	ENG.	APPD.
TECHN.	ENG.	APPD.	

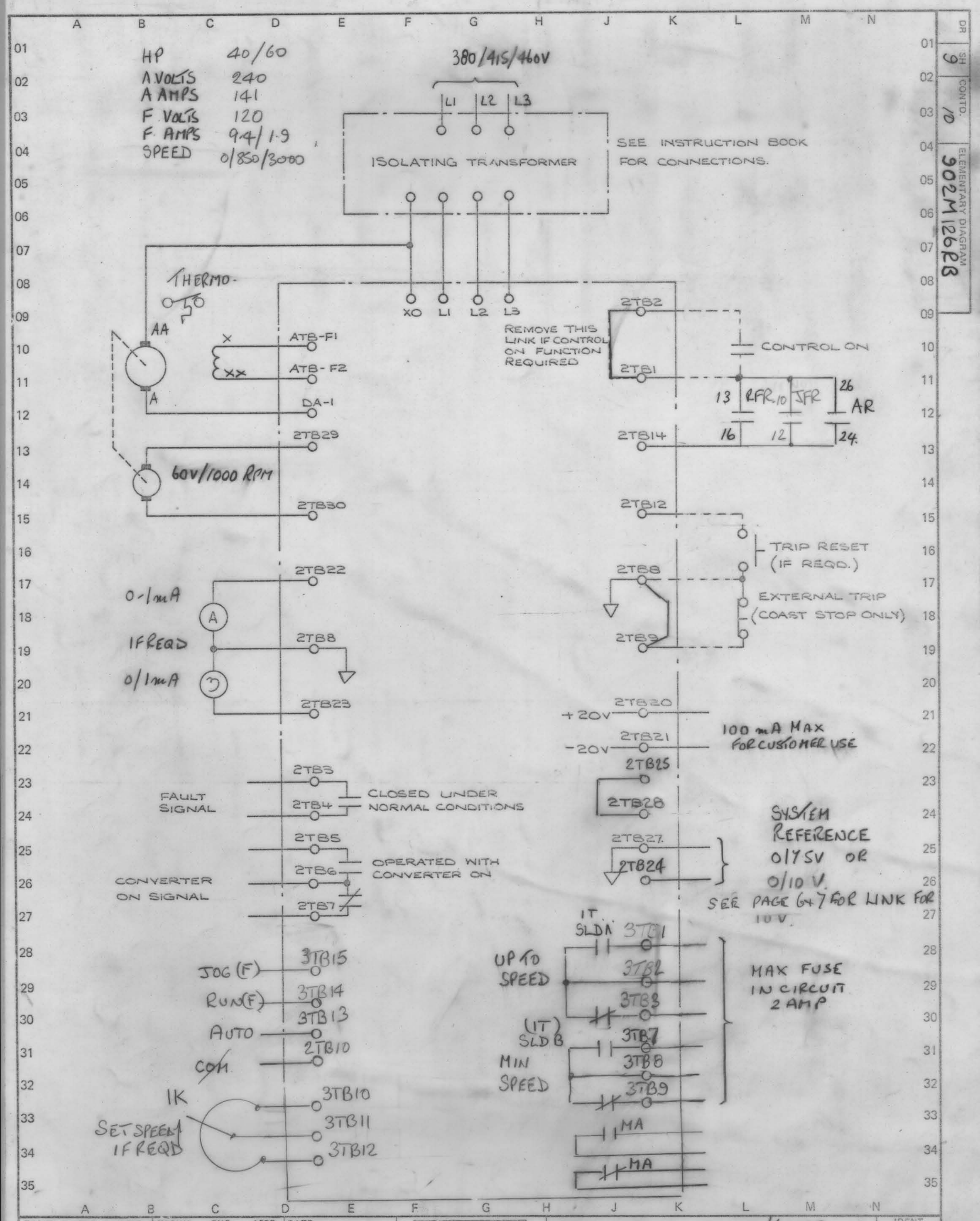

TECHN.	ENG.	APPD.	TECHN.	ENG.	APPD.	DATE 3.9.82	ALLENWEST Simplex	BDC 3034R 40/60HP CUSTOMER CONNECTIONS	IDENT
						TECHN.	VARIABLE SPEED DRIVES OPERATION, BRIGHTON, ENGLAND.	GO NUMBER 233NOD	ELEMENTARY DIAGRAM 902M126RB
						ENG.		CONTD. 10	DR / SH 9
						APPD.			

VOLTAGE POLARIES SHOWN ARE FOR MOTORING DA1(+)

HARDWARE ABBREVIATIONS

MCC	MAIN CONTROL CARD
IFC	INTERFACE CARD
PSC	POWER SUPPLY CARD
SCR	THYRISTOR ASSEMBLY
DGC	DIAGNOSTIC CARD
MFC	MOTOR FIELD CONTROL
MFE	MOTOR FIELD EXCITER
MDR	MODIFICATION RACK
ACC	AUXILIARY CONTROL CARD

SYMBOLS

AMPLIFIERS

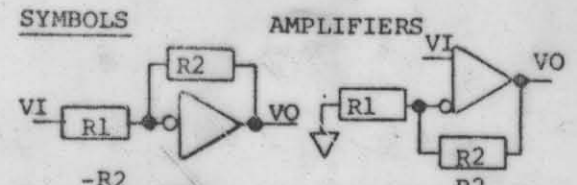

$VO = \frac{-R2}{R1} VI$ $\qquad$ $VO = (1 + \frac{R2}{R1}) VI$

CASE GROUND

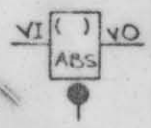

VO = SIGN () X ABSOLUTE VALUE OF VI

STAB ON TERMINAL

TERMINAL AT 2TB, 3TB, 4TB, RTB.
EX: 9 [2] - 2TB9; X2 [R] - RTBX2

TERMINAL AT T.B.'s

POTENTIOMETER ARROWS ON THE CARD ELEMENTARY DIAGRAMS INDICATE THE WIPER DIRECTION AS THE POTENTIOMETER SHAFT IS ROTATED CLOCKWISE TO INCREASE FUNCTION.

THESE RESISTORS ARE CRIMPED IN WIRE HARNESS.

FUNCTION	USE	LOC	JUMPERS
60HZ		MFC	ZA-ZB (IF USED)
50HZ	X	MCC	HZA - PHA
IOC-400%	X		(NONE)
-500%		IFC	I - IHI
-300%		IFC	I-ILO
SR5 - 9v	X		NONE)
9 - 20v		MCC	SRH - COM
JOGR 10v			(NONE)
20V		MCC	JH - COM
LT.3-7sec.			(NONE)
2 - 60sec	X		332Ω FROM LTI TO COM
VREG			NT-CEMF CC-COM
DC TACHO			(NONE)
AC TACHO		MCC	AT1 - AT2
TACHO FILT		IFC	TC - TC
TACHO V. 24-64vdc		IFC	NT-NT1 PT - PT1
27-71vac		IFC	NT-NT1 PT - PT1
60-160vdc		IFC	NT-NT2 PT - PT2
66-177vac		IFC	NT-NT2 PT - PT2
110-300vdc	X	IFC	NT-NT3 PT - PT3
120-300vac		IFC	NT-NT3 PT - PT3
G134 G256		IFC	MFC OR MFE
ΣP .8 1.7		MF	NONE
ΣI 1.3 2.8		MF	YB - YD
2.4 5.0		MF	YA - YB
ΣX 4.0 8.0		MF	YA-YB, YC-YD
7.0 13		MF	YA - YC
Σ 13 25		MF	YA-YC, YB-YD
L/R < .25S		MFC	QA - QB
INH RUN		DGC	D1-D2 (IF USED)
INH DRV CL		MCC	DC1 - COM
FUSELESS		ACC	CFY - CFX

SIGNAL DEFINITIONS AND LOCATIONS

*	CEMF	COUNTER EMF (316)
*	CFB	CURRENT FEEDBACK (316)
	CMFA	ABSOLUTE VALUE CEMF (308)
	CRM	CROSSOVER MODIFY (411)
	DFP	DELAYED FIRING POWER (325)
*	DR	DRIVER REFERENCE (333)
*	EAO	ERROR AMP OUTPUT (333)
	EST	EXTERNAL FLT STOP INPUT (314)
	FALT	FAULT (314)
*	FC	FIELD CURRENT (NS26)
	FDR	FIELD DIAGNOSTIC REFERENCE (408)
	FEA	FIELD ECONOMY ADJUST (325)
	FF	FIELD FAULT (328)
	IABS	MOTOR CURRENT ABSOLUTE (309)
	ILA	CURRENT LIMIT ADJUST (323)
	IMET	CURRENT SIGNAL FOR METER (310)
*	IPU	INITIAL PULSE (320)
*	LR	LOCAL REF. FROM DGC (333)
*	JOG	JOG SWITCH INPUT (323)
*	JOGR	JOG REFERENCE INPUT (331)
*	MAC	MAX/MA CONTROL SIGNAL (320)
	MSW	MODE SWITCH (330)
*	OSC	OSCILLATOR (317)
*	PCR	PHASE CONTROL REF. (326)
*	PRE	DRIVE PRECONDITION (321)
	ØSEQ	PHASE SEQUENCE (314)
	RERR	REGULATOR ERROR (327)
	RIJ	INTEGRATOR SUMMING JUNCTION (327)
	RJ	REGULATOR SUMMING JUNCTION (331)
	RRA	REGULATOR RESPONSE ADJUST (330)
	RSET	RESET (316)
*	RTR	READY TO RUN (316)
*	RUN	RUN SWITCH INPUT (321)
*	SA-C	PHASE SYN OUTPUT (316)
*	SFB	SPEED FEEDBACK (320)
	SMET	SPEED SIGNAL FOR METER (312)
*	SR	SYSTEM REFERENCE INPUT (329)
*	SYS	SYSTEM FAULT TRIP (313)
*	TA	OUTPUT FOR TACHO TRIP ADJUST (320)
	TF	TACHO FAULT (NS28)
*	TFB	TACHOMETER FEEDBACK (320)
	TFR	AC TACHO FREQUENCY OUTPUT (313)
*	TR	TIMED REFERENCE (333)
*	VFB	VOLTAGE FEEDBACK (319)
*	WFR	WEAK FIELD REFERENCE (320)

(* - TEST POINT ON DOOR FRONT)

MAPPING SYSTEM

(NS/PS/TS) PS - PAST SHEET
NS - NEXT SHEET
TS - THIS SHEET

HENCE (PS - 12) DENOTES LOCATION ON PAST SHEET LINE 12. OTHER LOCATIONS ARE DENOTED BY SHEET NUMBER AND LINE? E.G. (1A16) SIGNIFIES LOCATION ON SHEET 1A, LINE 16 ETC.

NOTE: FIELD EFFECT TRANSISTOR: THE CLOSED/OPEN (I/O) STATE OF THESE SWITCHED FOR "PRECONDITION" - "RUN" OR JOG" - "DIAGNOSTIC STATIC" - "DIAGNOSTIC RUN" IS SHOWN BY A FOUR DIGIT WORD WITH STATE SEQUENCE.

TECHN.	ENG.	APPD.	TECHN.	ENG.	APPD.	DATE 16·3·83	ALLENWEST Simplex VARIABLE SPEED DRIVES OPERATION, BRIGHTON, ENGLAND.	BDC 3064R 75HP (CONE BLANCHARD)	IDENT DR	SH
			SEE SH 10 12·7·83			TECHN. ENG. APPD.		GO NUMBER 308N00 / ELEMENTARY DIAGRAM 902M126XC / CONTD. 2		1

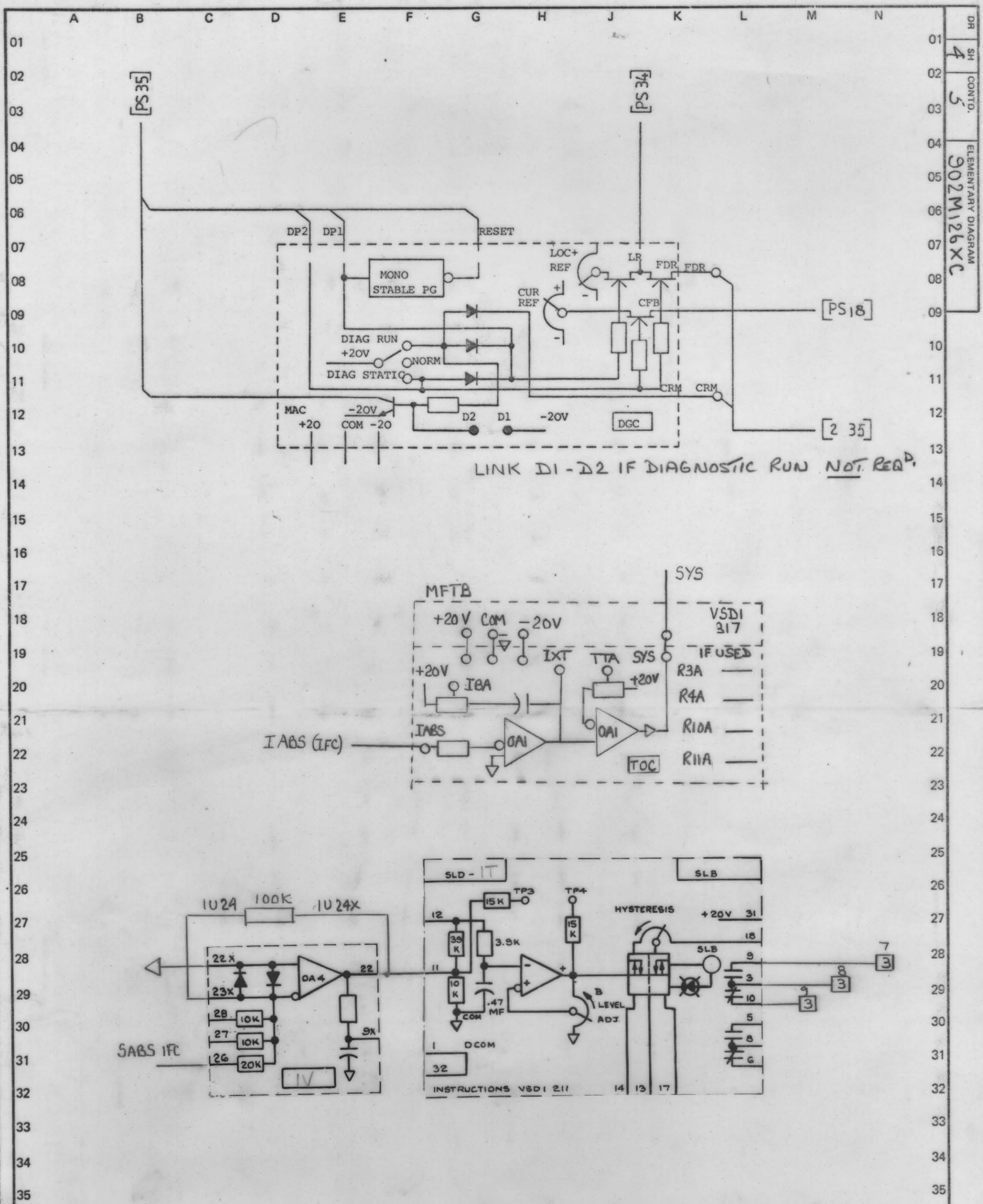

TECHN.	ENG.	APPD.	TECHN.	ENG.	APPD.	DATE 16 3 83	ALLENWEST Simplex	BDC 3064R 75HP	IDENT
						TECHN.	VARIABLE SPEED DRIVES OPERATION, BRIGHTON, ENGLAND.		DR / SH
						ENG.			
						APPD.			

GO NUMBER	ELEMENTARY DIAGRAM	CONTD.	DR	SH
308N00	902M126XC	5		4

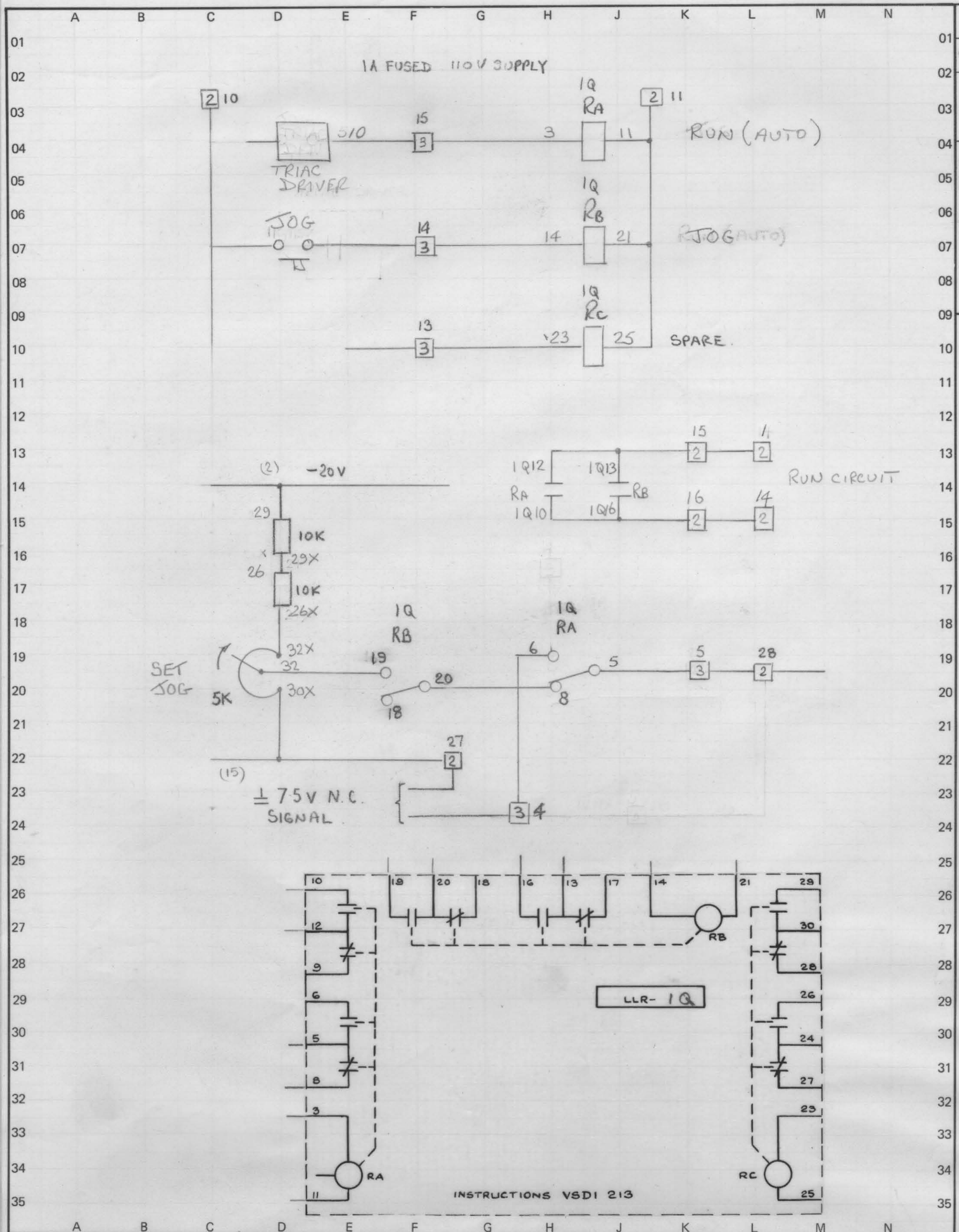

TECHN.	ENG.	APPD.	TECHN.	ENG.	APPD.	DATE 16.3.83	ALLENWEST Simplex	BDC 3064R 75HP	IDENT
			2		12.7.83	TECHN.	VARIABLE SPEED DRIVES OPERATION, BRIGHTON, ENGLAND.		DR / SH 5
						ENG.			
						APPD.			

GO NUMBER	ELEMENTARY DIAGRAM	CONTD.
308N00	902M126XC	6

DR / SH 5 / CONTD. 6 / ELEMENTARY DIAGRAM 902M126XC

DR	SH	CONTD.	ELEMENTARY DIAGRAM
	6	7	902M126XC

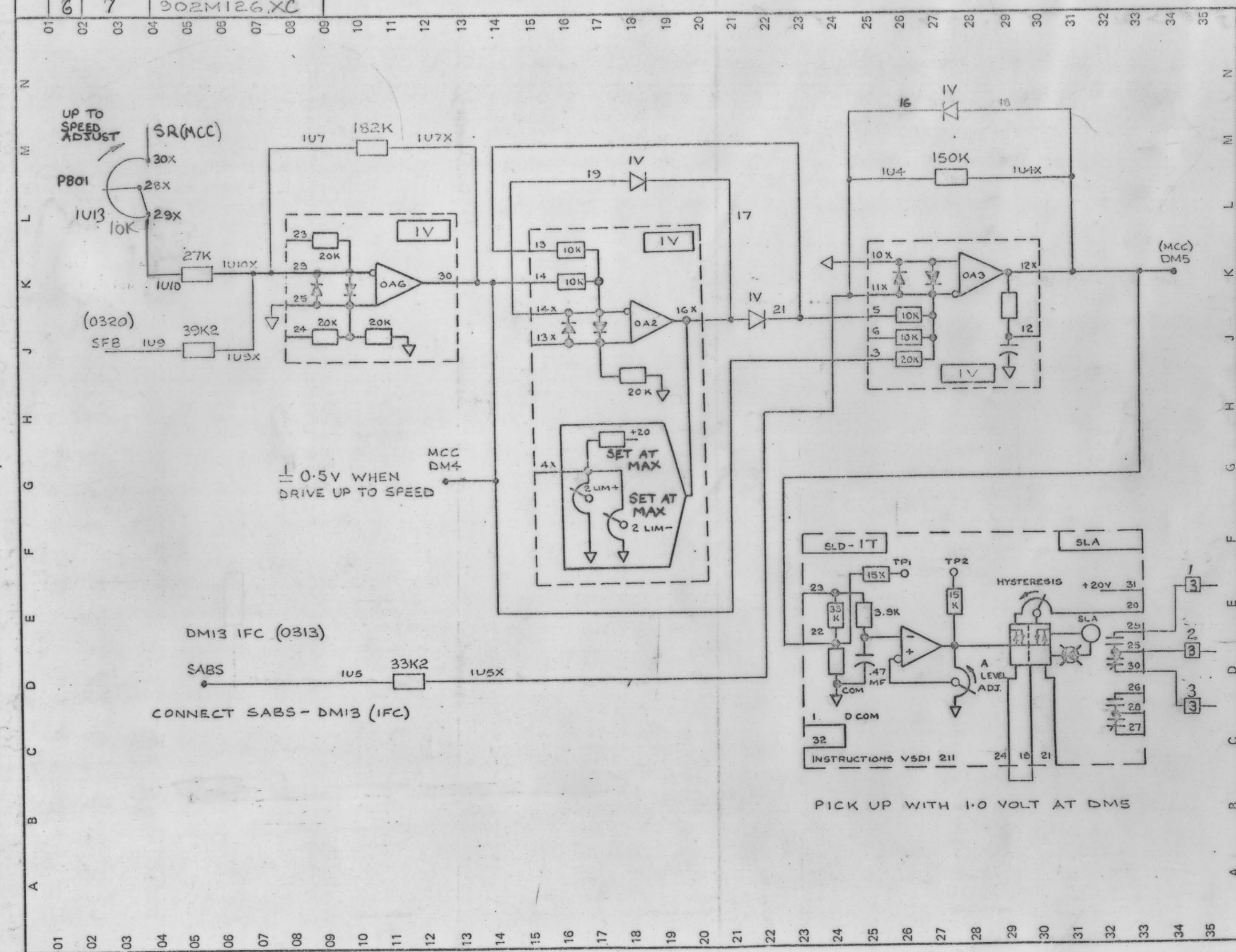

BDC 306.4R 75 HP	UP TO SPEED CIRCUIT	CONTD. 7	SH 6
	GO NUMBER 308N00	ELEMENTARY DIAGRAM 902M126XC	DR

Simplex

VARIABLE SPEED DRIVES OPERATION, BRIGHTON, ENGLAND.

TECHN.	ENG.	APPD.	DATE 16-3-83
TECHN.	ENG.	APPD.	TECH.
			ENG.
			APPD.

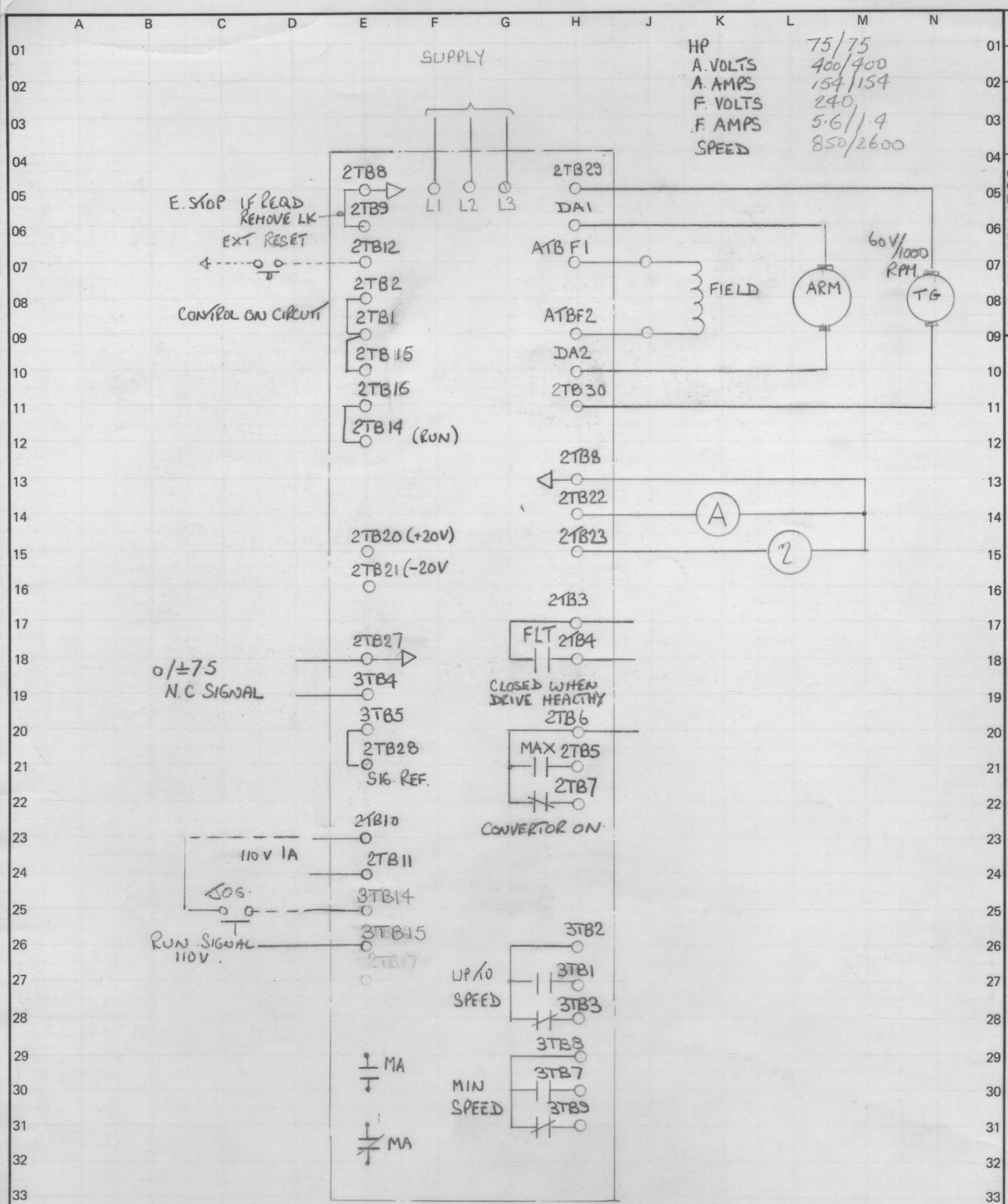

DR	SH	CONTD.	ELEMENTARY DIAGRAM
	9	10	902M126XC

TECHN.	ENG.	APPD.	TECHN.	ENG.	APPD.	DATE 16·3·83
						TECHN.
						ENG.
					12·7·83	APPD.

ALLENWEST Simplex
VARIABLE SPEED DRIVES OPERATION, BRIGHTON, ENGLAND.

BDC 3064R 75HP
CUSTOMER CONNECTIONS

GO NUMBER	ELEMENTARY DIAGRAM	CONTD.	DR	SH
308N00	902M126XC	10		9

IDENT